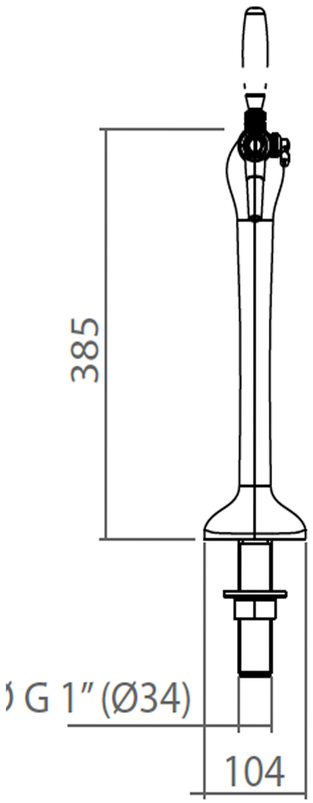
385
G 1" (Ø34)
104

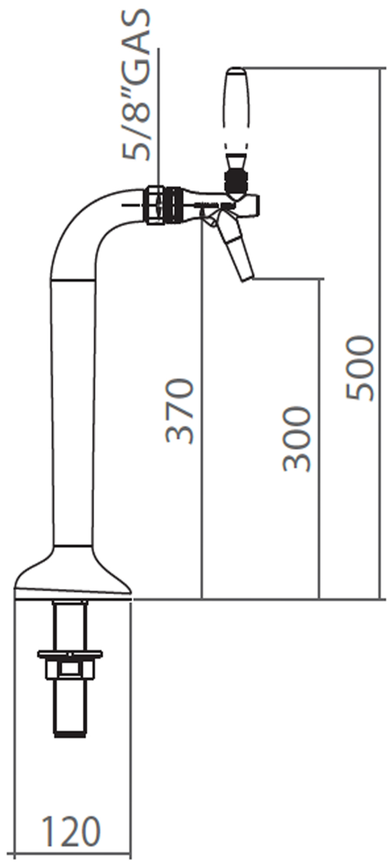
5/8"GAS
370
300
500
120

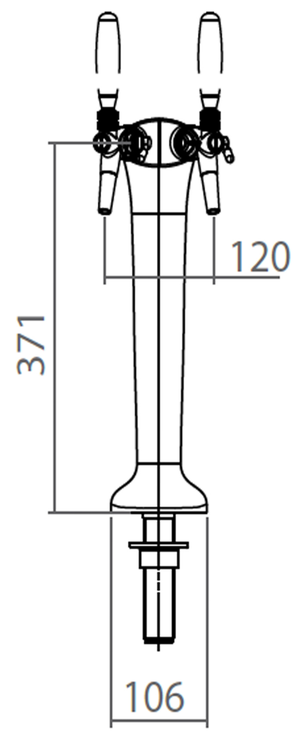
120
371
106

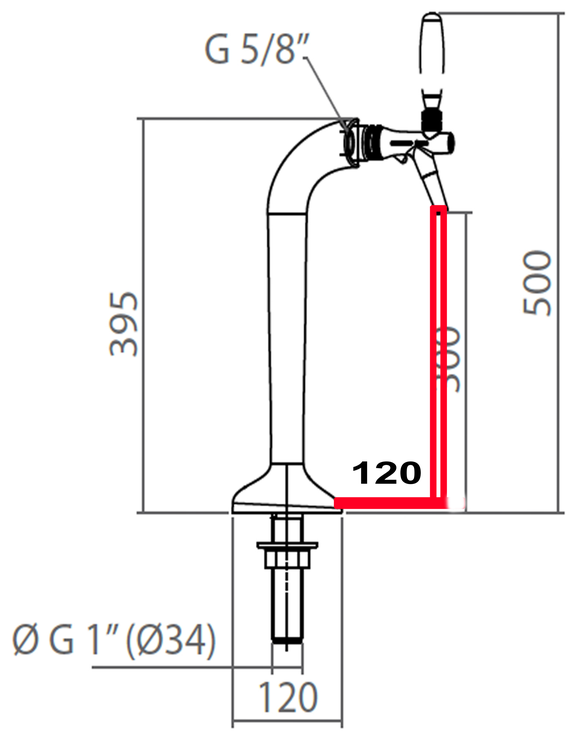
G 5/8"
395
300
500
120
Ø G 1" (Ø34)
120

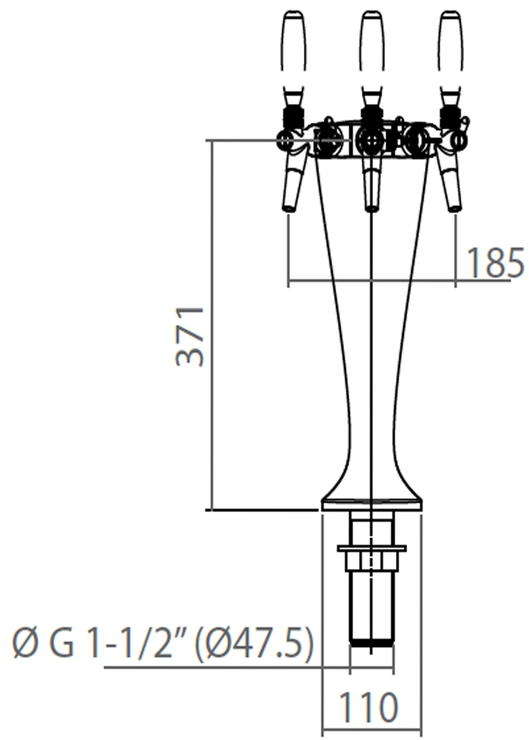
185
371
Ø G 1-1/2" (Ø47.5)
110